Inductive sensors, 3-wire, cylindrical, metal
IFRM 12P17G3/S14L

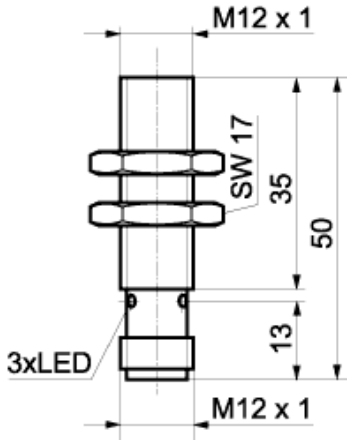

Technical Data	
sensing distance Sn	6 mm
output	PNP
output state	NO
mounting	quasi shielded
housing style	cylindrical
size	12 mm
length	50 mm
housing material	brass nickel plated
connection	connector
voltage supply range +Vs	12 - 30 V
supply voltage	DC
supply current	< 18 mA
max. switching current	< 200 mA
voltage drop Vd	< 2 V
switching frequency	< 400 Hz
switching hysteresis	2 - 25 % of Sr
output indicator	3 port LED red
short circuit protection	yes
reverse polarity protection	yes
temperature range	-25 ... +75 °C
sensing face material	PBT
protection class	IP 67
connector options	ES 14, ES 18, ESW 33, ESG 34

photo

circuit diagram

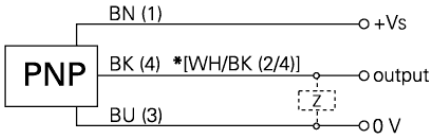

Not for flush mounting in mild steel
triple sensing distance
(*) .../S14L pin 2 & 4 electrically connected